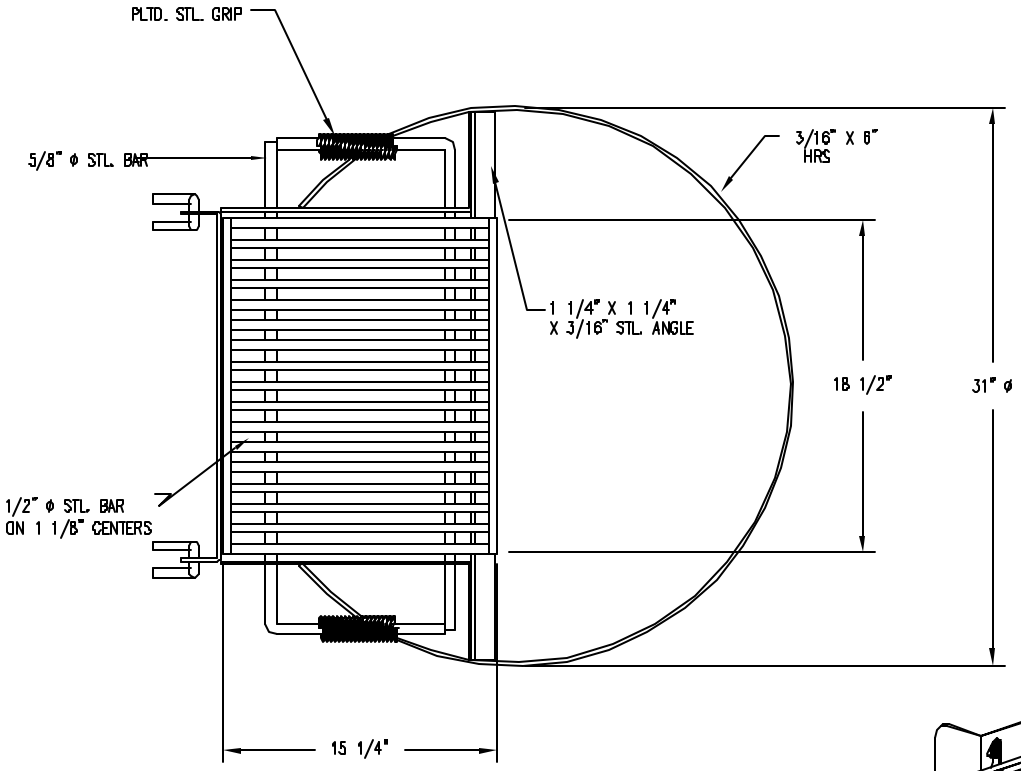

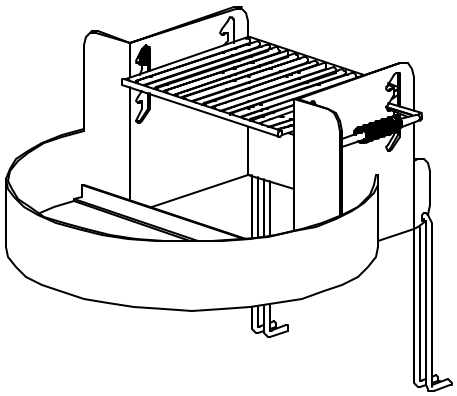

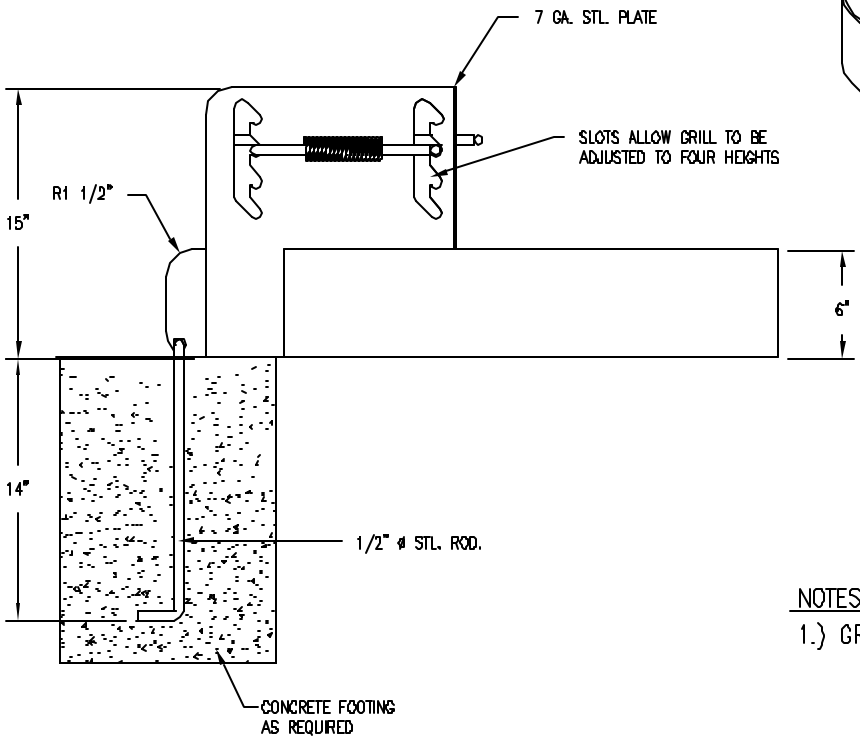

NOTES:

1.) GRILL RING FINISHED W/ HEAT RESISTANT BLACK ENAMEL

DuMor, inc. P.O. Box 142 Mifflintown, PA 17059-0142	SCALE : NONE	TITLE : GRILL RING		
	DATE DRAWN :3/22/94			
	DRAWN BY : CDC	REV. A	DRAWING NUMBER 26-00	SHEET 1 OF 2
	DATE REV. :			
	REV. BY :			

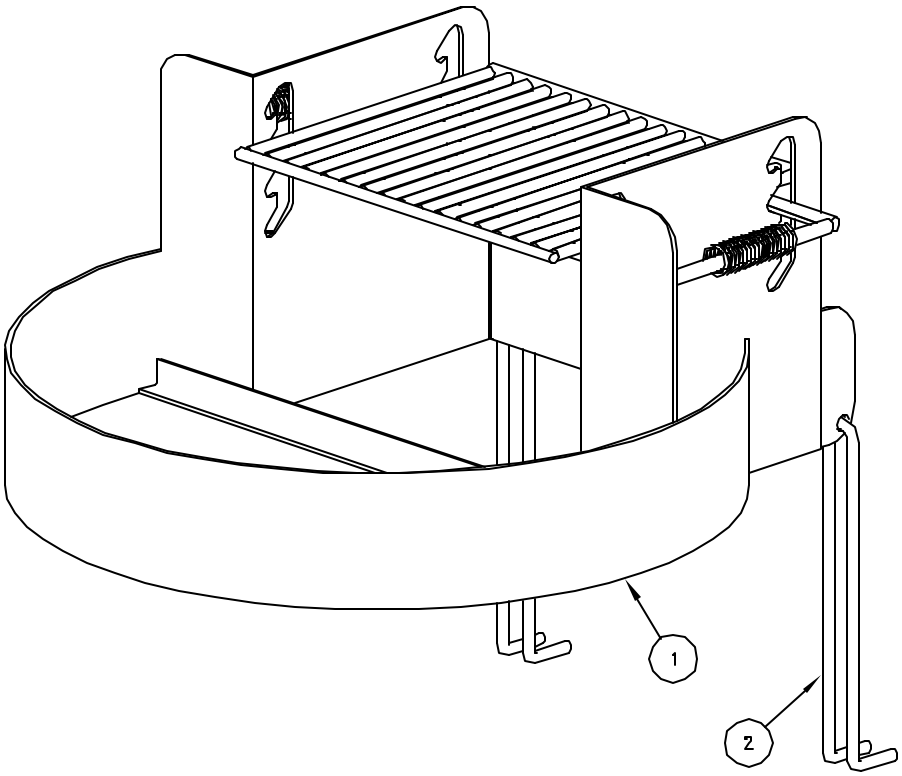

STEP 1:

USE 1 – PC GRILL RING (1)

2 – PCS. ANCHORING STAPLES (2)

LOOP ANCHOR STAPLE (2) ON BACK OF GRILL RING (1).

(AS SHOWN ABOVE).

STEP 2:

MOUNT AS SPECIFIED.

ITEM	QTY	PART NO	DESCRIPTION
1	1	0-26-00-01	GRILL RING
2	2	0-26-00-02	ANCHORING STAPLES

DuMor, inc.

P.O. Box 142 Mifflintown, PA 17059-0142

SCALE : NONE

DATE DRAWN :3/22/94

DRAWN BY : CDC

DATE REV. :

REV. BY :

TITLE : GRILL RING ASSEMBLY

REV. A

DRAWING NUMBER 26-00

SHEET 2 OF 2