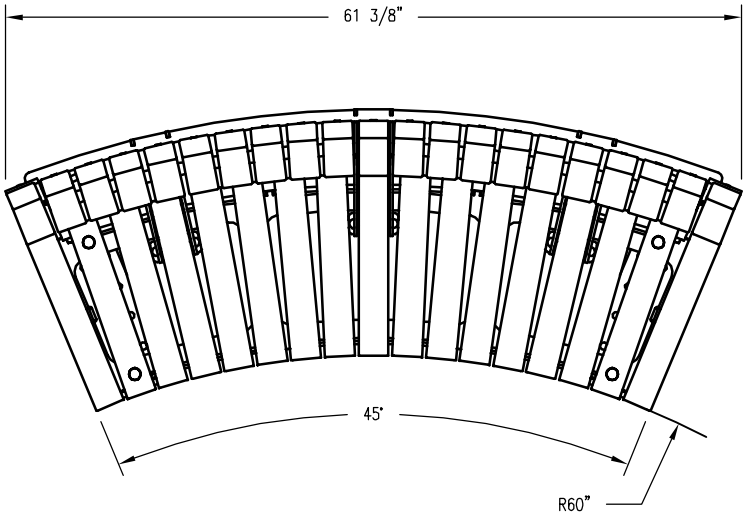

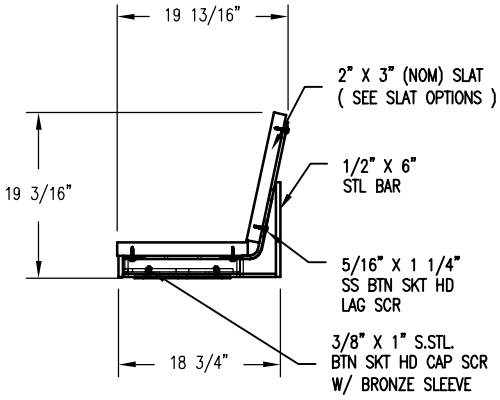

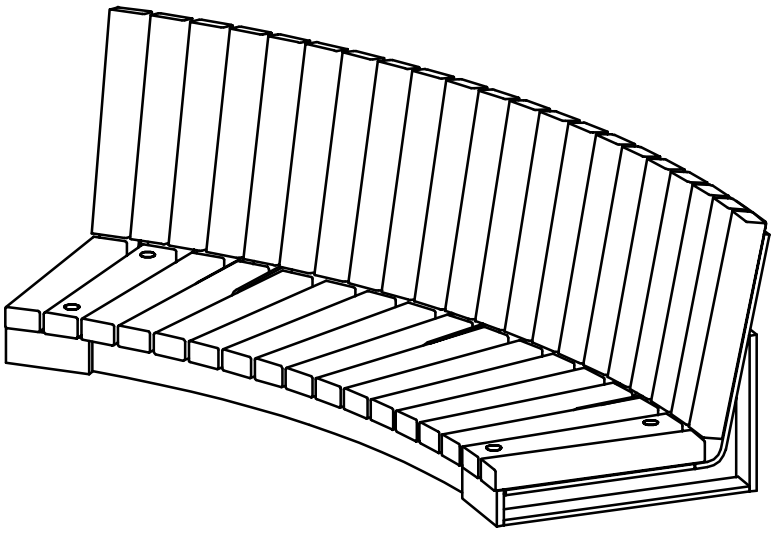

SLAT OPTIONS

- ☐ "CEDAR" RECYCLED PLASTIC
- ☐ "GREY" RECYCLED PLASTIC
- ☐ "REDWOOD" RECYCLED PLASTIC
- ☐ "WALNUT" RECYCLED PLASTIC
- ☐ OTHER _____

NOTES:

1.) ALL STL. MEMBERS COATED W/ ZINC RICH EPOXY THEN FINISHED W/ POLYESTER POWDER COATING.
2.) 1/2" X 3 3/4" EXPANSION ANCHOR BOLTS PROVIDED.

DuMor, inc.	BENCH	DATE DRAWN : 3/10/22 DRAWN BY : JSB DATE REV. : 00/00/00 REV. BY : XXX	REV. A	DRAWING NUMBER WR520-60PL-002	SHEET 1 OF 2