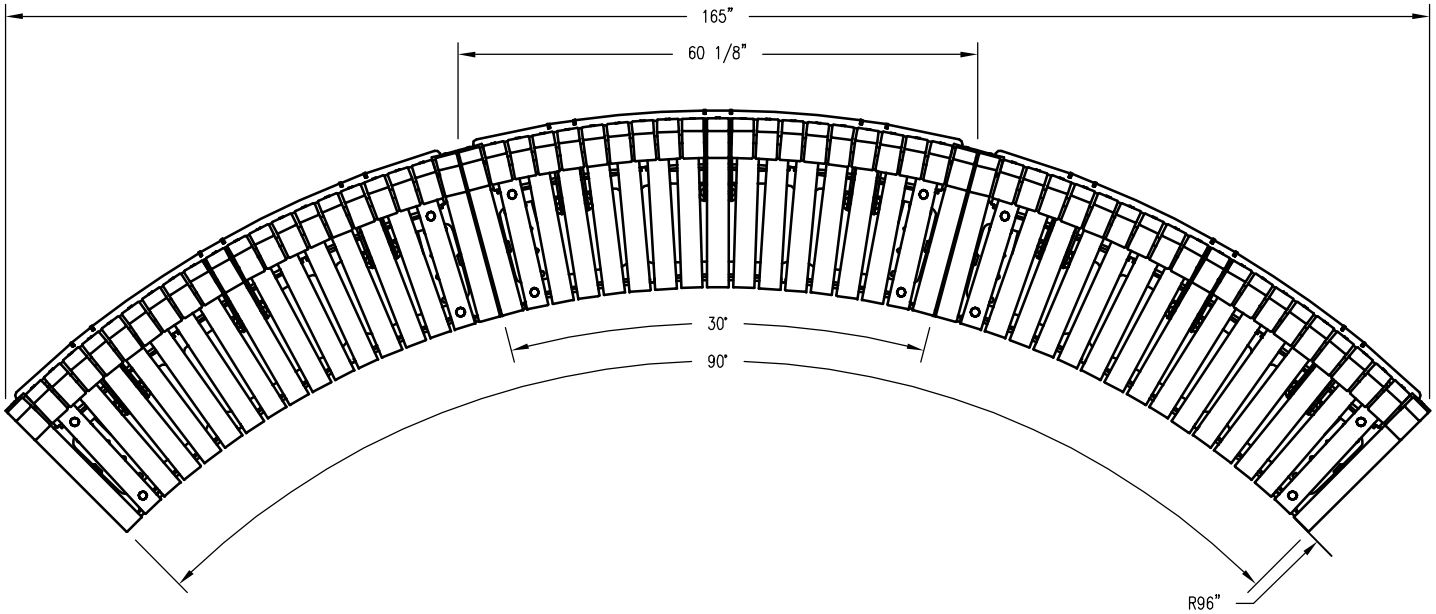

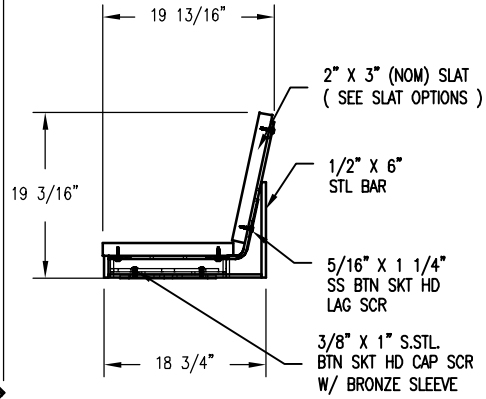

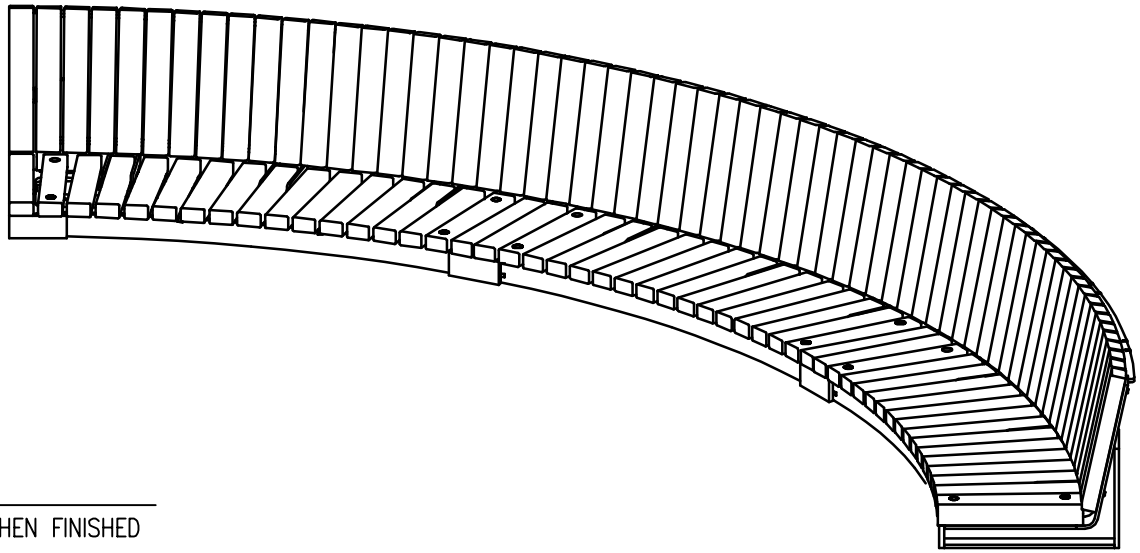

SLAT OPTIONS

- ☐ ANTIQUE MAHOGANY TEXTURED
- ☐ BRAZILIAN WALNUT TEXTURED
- ☐ OTHER _____

NOTES:

1.) ALL STL. MEMBERS COATED W/ ZINC RICH EPOXY THEN FINISHED W/ POLYESTER POWDER COATING.

2.) 1/2" X 3 3/4" EXPANSION ANCHOR BOLTS PROVIDED.

DuMor, inc.	BENCH	DATE DRAWN : 3/11/22 DRAWN BY : JSB DATE REV. : REV. BY :	REV. A	DRAWING NUMBER WR520-96TX-004	SHEET 1 OF 2